| | | |
|---|---|---|
| DP | | 5/7 |
| Number of teeth | Z | 60 |
| Addendum modification | x | 0 |
| Pressure angle | a | 20° |
| Accuracy grade | 10-ISO 1328/97 | |

gear precision

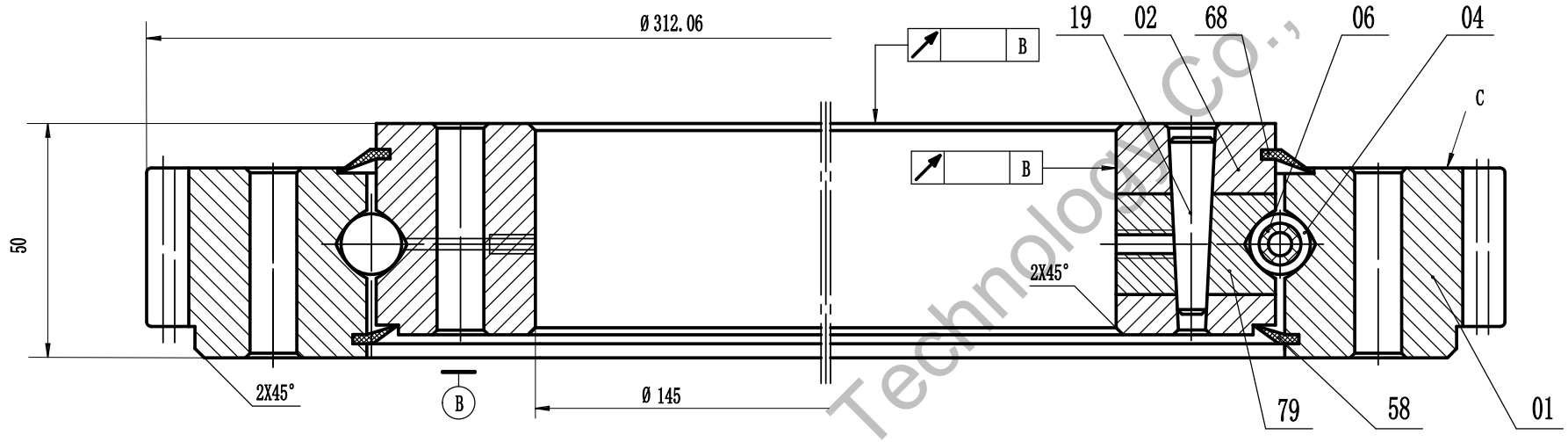


Remark:

1. Luoyang JCB Bearing Technology Co., Ltd is a technical Inc, specialize in designing and manufacturing slewing ring bearing, we can design and manufactur all kinds of slewing bearing according to client's requirement.
2. This drawing is reference for user, if you need formal drawing, please contact wth us sales@jcb-bearing.com, the official drawing will be submitted after order confirmation.


Contact information
Company Address : No.3 Lianmeng road, Luoyang, Henan, China.
Postal code : 471003
Phone : 86-379-68611678 Fax : 86-379-68611679
E-mail: sales@jcb-bearing.com
Reserved E-mail: sales@slewing-ring-bearings.com
Website: www.jcb-bearing.com
www.slewing-ring-bearings.com


| No. | name | qty | material | unit weight | total (kg) |
|---|---|---|---|---|---|
| 58 | second seal | 1 | oil resistant rubber | | |
| 68 | seal | 1 | oil resistant rubber | | |
| 79 | plug | 1 | steel | | |
| 19 | taper pin | 1 | steel | | |
| 06 | cage | | nylon | | |
| 04 | steel ball | | steel | | |
| 02 | inner ring | 1 | steel | | |
| 01 | outer ring | 1 | steel | | |

four-point contact ball slewing ring bearing

9E-1B20-0222-0718

weight(kg): 17

total page 8 page No. 1

Luoyang JCB Bearing Technology Co., Ltd

Luoyang JCB Bearing Technology Co., Ltd